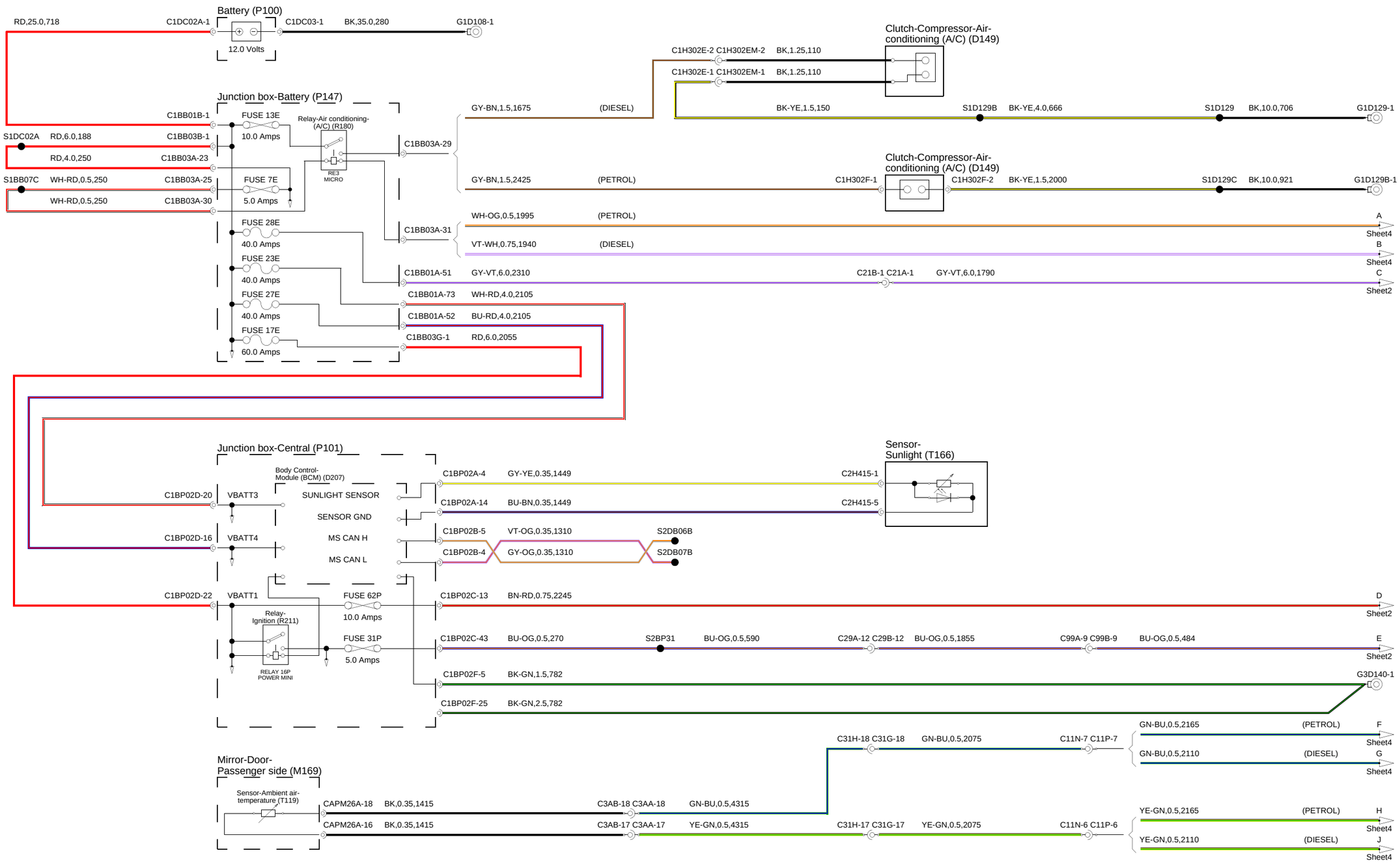
Battery (P100)
RD,25.0,718
C1DC02A-1
C1DC03-1
BK,35.0,280
G1D108-1
12.0 Volts
Clutch-Compressor-Air-conditioning (A/C) (D149)
C1H302E-2 C1H302EM-2
BK,1.25,110
C1H302E-1 C1H302EM-1
BK,1.25,110
Junction box-Battery (P147)
C1BB01B-1
FUSE 13E
10.0 Amps
Relay-Air conditioning-(A/C) (R180)
RE3 MICRO
S1DC02A
RD,6.0,188
C1BB03B-1
RD,4.0,250
C1BB03A-23
S1BB07C
WH-RD,0.5,250
C1BB03A-25
FUSE 7E
5.0 Amps
WH-RD,0.5,250
C1BB03A-30
FUSE 28E
40.0 Amps
FUSE 23E
40.0 Amps
FUSE 27E
40.0 Amps
FUSE 17E
60.0 Amps
C1BB03A-29
C1BB03A-31
C1BB01A-51
C1BB01A-73
C1BB01A-52
C1BB03G-1
GY-BN,1.5,1675
(DIESEL)
BK-YE,1.5,150
S1D129B
BK-YE,4.0,666
S1D129
BK,10.0,706
G1D129-1
GY-BN,1.5,2425
(PETROL)
C1H302F-1
C1H302F-2
BK-YE,1.5,2000
S1D129C
BK,10.0,921
G1D129B-1
WH-OG,0.5,1995
(PETROL)
VT-WH,0.75,1940
(DIESEL)
GY-VT,6.0,2310
C21B-1 C21A-1
GY-VT,6.0,1790
WH-RD,4.0,2105
BU-RD,4.0,2105
RD,6.0,2055
A
Sheet4
B
Sheet4
C
Sheet2
Junction box-Central (P101)
Body Control-Module (BCM) (D207)
C1BP02D-20
VBATT3
SUNLIGHT SENSOR
SENSOR GND
C1BP02D-16
VBATT4
MS CAN H
MS CAN L
C1BP02D-22
VBATT1
Relay-Ignition (R211)
RELAY 16P POWER MINI
FUSE 62P
10.0 Amps
FUSE 31P
5.0 Amps
C1BP02A-4
GY-YE,0.35,1449
C1BP02A-14
BU-BN,0.35,1449
C1BP02B-5
VT-OG,0.35,1310
C1BP02B-4
GY-OG,0.35,1310
S2DB06B
S2DB07B
Sensor-Sunlight (T166)
C2H415-1
C2H415-5
C1BP02C-13
BN-RD,0.75,2245
C1BP02C-43
BU-OG,0.5,270
S2BP31
BU-OG,0.5,590
C29A-12 C29B-12
BU-OG,0.5,1855
C99A-9 C99B-9
BU-OG,0.5,484
C1BP02F-5
BK-GN,1.5,782
C1BP02F-25
BK-GN,2.5,782
D
Sheet2
E
Sheet2
G3D140-1
C31H-18 C31G-18
GN-BU,0.5,2075
C11N-7 C11P-7
GN-BU,0.5,2165
(PETROL)
F
Sheet4
GN-BU,0.5,2110
(DIESEL)
G
Sheet4
Mirror-Door-Passenger side (M169)
Sensor-Ambient air-temperature (T119)
CAPM26A-18
BK,0.35,1415
C3AB-18 C3AA-18
GN-BU,0.5,4315
CAPM26A-16
BK,0.35,1415
C3AB-17 C3AA-17
YE-GN,0.5,4315
C31H-17 C31G-17
YE-GN,0.5,2075
C11N-6 C11P-6
YE-GN,0.5,2165
(PETROL)
H
Sheet4
YE-GN,0.5,2110
(DIESEL)
J
Sheet4

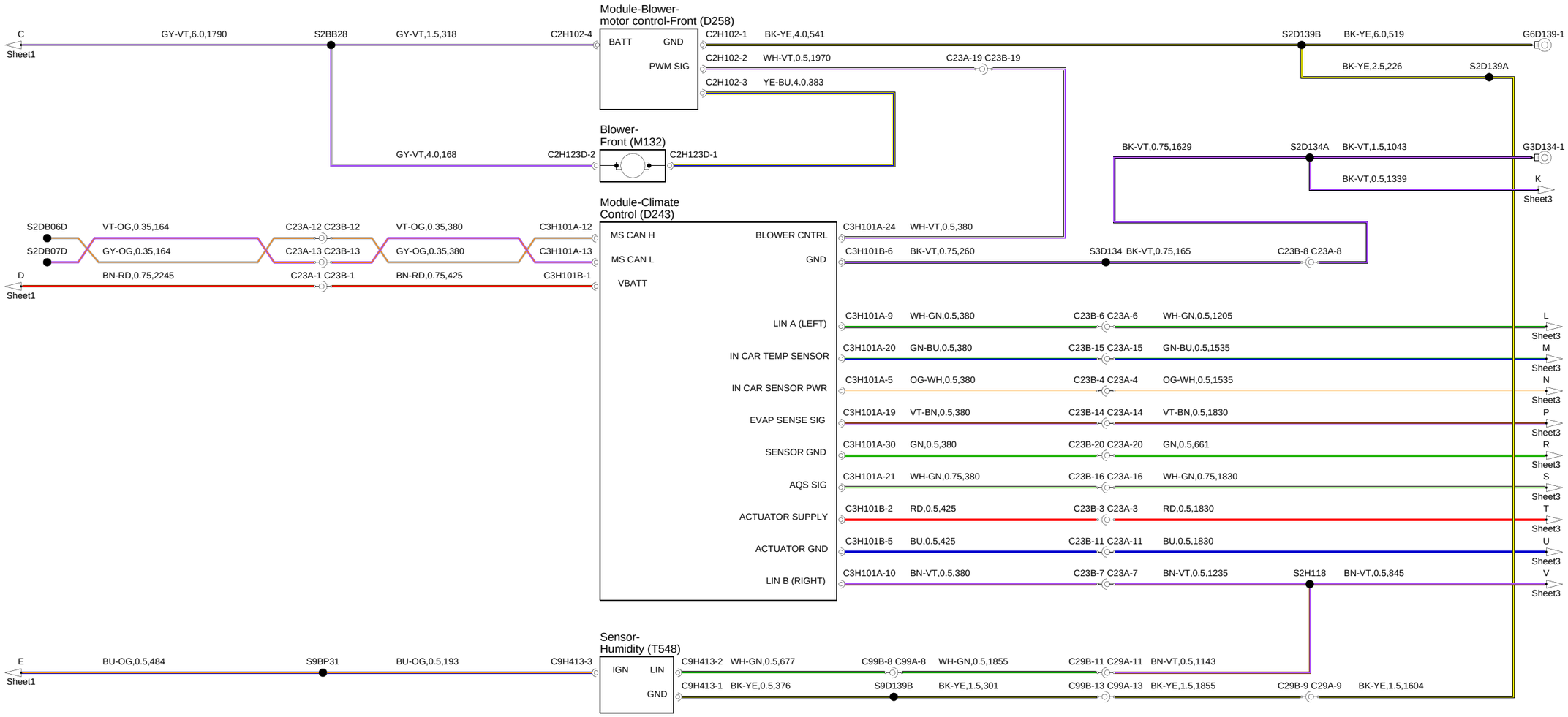
Module-Blower-motor control-Front (D258)
BATT
GND
PWM SIG
C
Sheet1
GY-VT,6.0,1790
S2BB28
GY-VT,1.5,318
C2H102-4
C2H102-1
BK-YE,4.0,541
S2D139B
BK-YE,6.0,519
G6D139-1
C2H102-2
WH-VT,0.5,1970
C23A-19 C23B-19
BK-YE,2.5,226
S2D139A
C2H102-3
YE-BU,4.0,383
Blower-Front (M132)
GY-VT,4.0,168
C2H123D-2
C2H123D-1
BK-VT,0.75,1629
S2D134A
BK-VT,1.5,1043
G3D134-1
BK-VT,0.5,1339
K
Sheet3
Module-Climate Control (D243)
S2DB06D
VT-OG,0.35,164
C23A-12 C23B-12
VT-OG,0.35,380
C3H101A-12
MS CAN H
BLOWER CNTRL
C3H101A-24
WH-VT,0.5,380
S2DB07D
GY-OG,0.35,164
C23A-13 C23B-13
GY-OG,0.35,380
C3H101A-13
MS CAN L
GND
C3H101B-6
BK-VT,0.75,260
S3D134
BK-VT,0.75,165
C23B-8 C23A-8
D
Sheet1
BN-RD,0.75,2245
C23A-1 C23B-1
BN-RD,0.75,425
C3H101B-1
VBATT
LIN A (LEFT)
C3H101A-9
WH-GN,0.5,380
C23B-6 C23A-6
WH-GN,0.5,1205
L
Sheet3
IN CAR TEMP SENSOR
C3H101A-20
GN-BU,0.5,380
C23B-15 C23A-15
GN-BU,0.5,1535
M
Sheet3
IN CAR SENSOR PWR
C3H101A-5
OG-WH,0.5,380
C23B-4 C23A-4
OG-WH,0.5,1535
N
Sheet3
EVAP SENSE SIG
C3H101A-19
VT-BN,0.5,380
C23B-14 C23A-14
VT-BN,0.5,1830
P
Sheet3
SENSOR GND
C3H101A-30
GN,0.5,380
C23B-20 C23A-20
GN,0.5,661
R
Sheet3
AQS SIG
C3H101A-21
WH-GN,0.75,380
C23B-16 C23A-16
WH-GN,0.75,1830
S
Sheet3
ACTUATOR SUPPLY
C3H101B-2
RD,0.5,425
C23B-3 C23A-3
RD,0.5,1830
T
Sheet3
ACTUATOR GND
C3H101B-5
BU,0.5,425
C23B-11 C23A-11
BU,0.5,1830
U
Sheet3
LIN B (RIGHT)
C3H101A-10
BN-VT,0.5,380
C23B-7 C23A-7
BN-VT,0.5,1235
S2H118
BN-VT,0.5,845
V
Sheet3
Sensor-Humidity (T548)
E
Sheet1
BU-OG,0.5,484
S9BP31
BU-OG,0.5,193
C9H413-3
IGN
LIN
C9H413-2
WH-GN,0.5,677
C99B-8 C99A-8
WH-GN,0.5,1855
C29B-11 C29A-11
BN-VT,0.5,1143
GND
C9H413-1
BK-YE,0.5,376
S9D139B
BK-YE,1.5,301
C99B-13 C99A-13
BK-YE,1.5,1855
C29B-9 C29A-9
BK-YE,1.5,1604

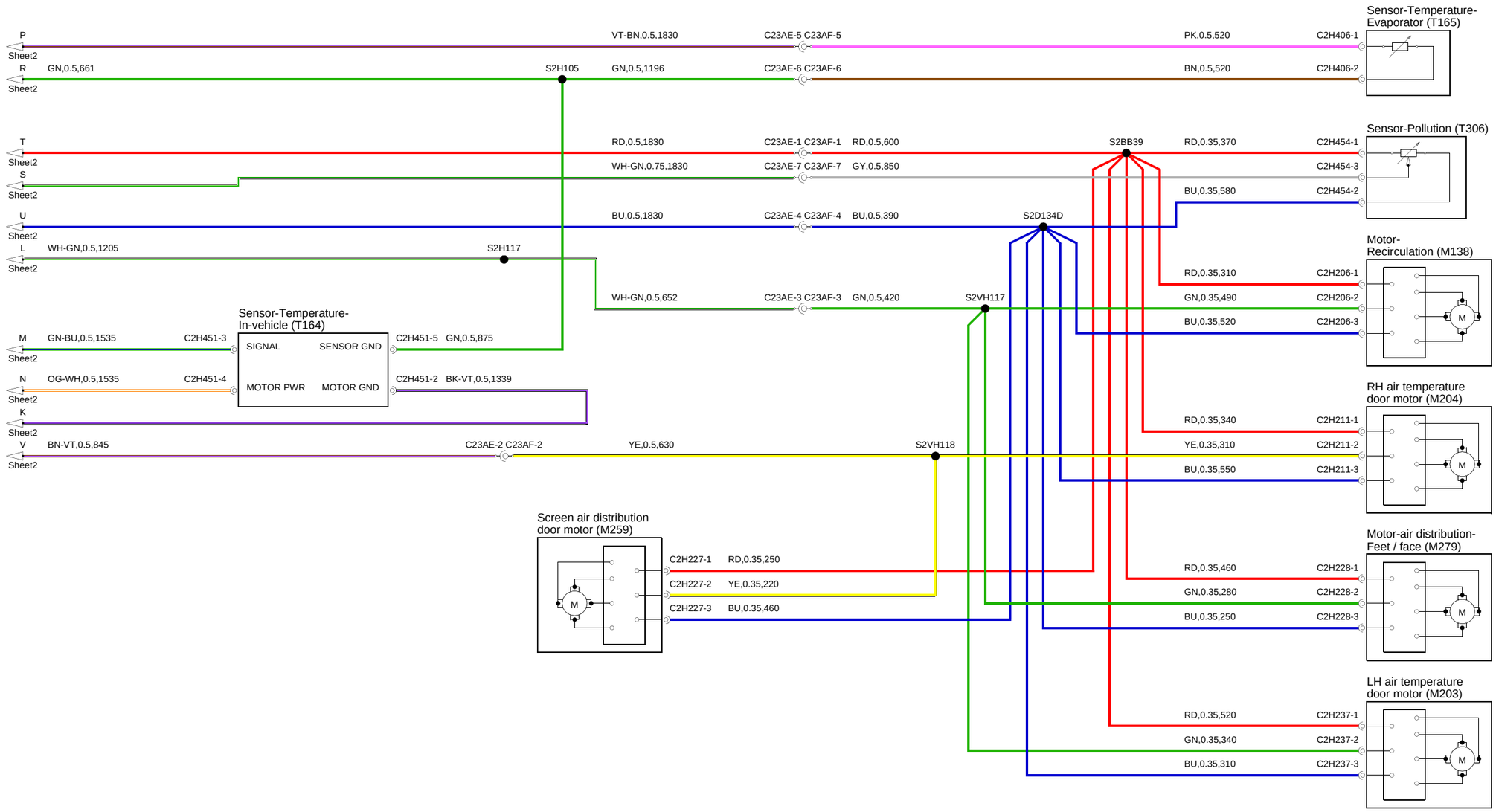
Sensor-Temperature-Evaporator (T165)
P
Sheet2
VT-BN,0.5,1830
C23AE-5 C23AF-5
PK,0.5,520
C2H406-1
R
GN,0.5,661
S2H105
GN,0.5,1196
C23AE-6 C23AF-6
BN,0.5,520
C2H406-2
Sensor-Pollution (T306)
T
RD,0.5,1830
C23AE-1 C23AF-1
RD,0.5,600
S2BB39
RD,0.35,370
C2H454-1
S
WH-GN,0.75,1830
C23AE-7 C23AF-7
GY,0.5,850
C2H454-3
BU,0.35,580
C2H454-2
U
BU,0.5,1830
C23AE-4 C23AF-4
BU,0.5,390
S2D134D
L
WH-GN,0.5,1205
S2H117
Motor-Recirculation (M138)
RD,0.35,310
C2H206-1
WH-GN,0.5,652
C23AE-3 C23AF-3
GN,0.5,420
S2VH117
GN,0.35,490
C2H206-2
BU,0.35,520
C2H206-3
Sensor-Temperature-In-vehicle (T164)
M
GN-BU,0.5,1535
C2H451-3
SIGNAL
SENSOR GND
C2H451-5
GN,0.5,875
N
OG-WH,0.5,1535
C2H451-4
MOTOR PWR
MOTOR GND
C2H451-2
BK-VT,0.5,1339
K
RH air temperature door motor (M204)
RD,0.35,340
C2H211-1
V
BN-VT,0.5,845
C23AE-2 C23AF-2
YE,0.5,630
S2VH118
YE,0.35,310
C2H211-2
BU,0.35,550
C2H211-3
Screen air distribution door motor (M259)
C2H227-1
RD,0.35,250
C2H227-2
YE,0.35,220
C2H227-3
BU,0.35,460
Motor-air distribution-Feet / face (M279)
RD,0.35,460
C2H228-1
GN,0.35,280
C2H228-2
BU,0.35,250
C2H228-3
LH air temperature door motor (M203)
RD,0.35,520
C2H237-1
GN,0.35,340
C2H237-2
BU,0.35,310
C2H237-3

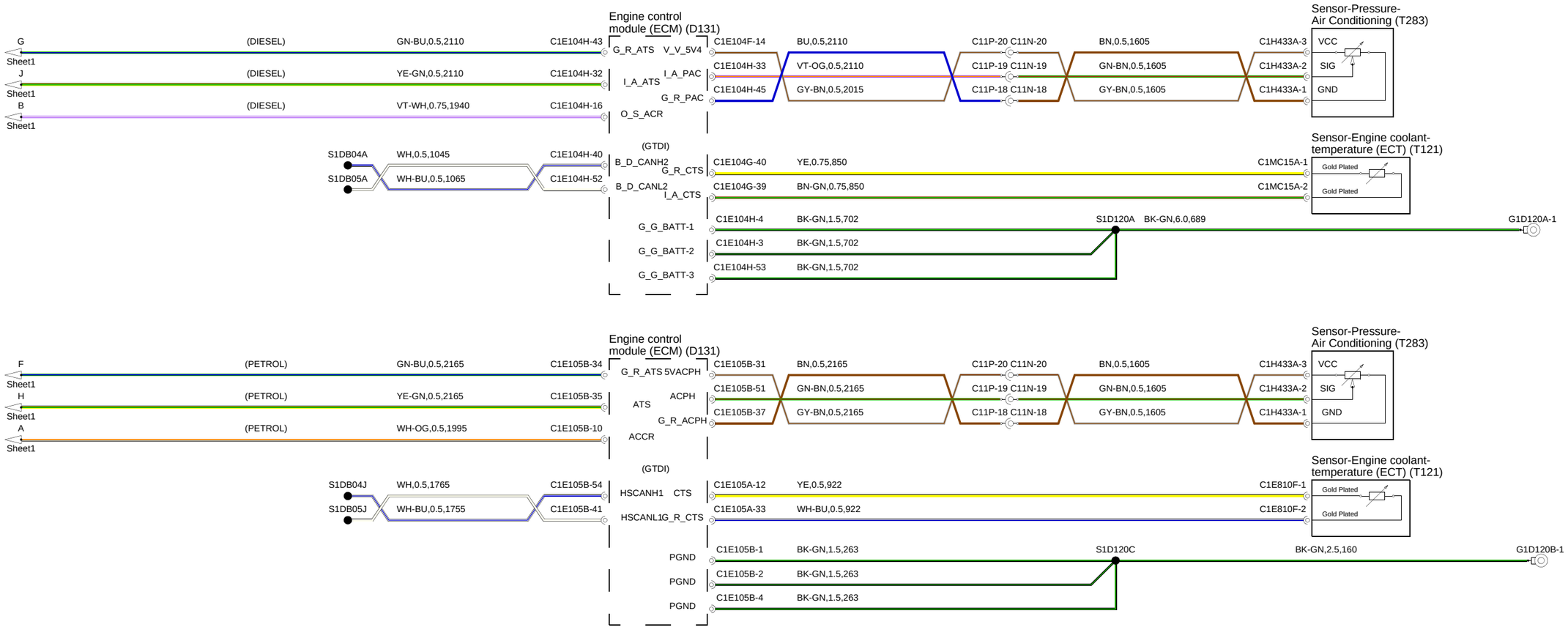
Engine control module (ECM) (D131)
Sensor-Pressure-Air Conditioning (T283)
Sensor-Engine coolant-temperature (ECT) (T121)
G
Sheet1
(DIESEL)
GN-BU,0.5,2110
C1E104H-43
G_R_ATS
V_V_5V4
C1E104F-14
BU,0.5,2110
C11P-20 C11N-20
BN,0.5,1605
C1H433A-3
VCC
J
YE-GN,0.5,2110
C1E104H-32
I_A_ATS
I_A_PAC
C1E104H-33
VT-OG,0.5,2110
C11P-19 C11N-19
GN-BN,0.5,1605
C1H433A-2
SIG
C1E104H-45
GY-BN,0.5,2015
G_R_PAC
C11P-18 C11N-18
GY-BN,0.5,1605
C1H433A-1
GND
B
VT-WH,0.75,1940
C1E104H-16
O_S_ACR
(GTDI)
S1DB04A
WH,0.5,1045
C1E104H-40
B_D_CANH2
G_R_CTS
C1E104G-40
YE,0.75,850
C1MC15A-1
Gold Plated
S1DB05A
WH-BU,0.5,1065
C1E104H-52
B_D_CANL2
I_A_CTS
C1E104G-39
BN-GN,0.75,850
C1MC15A-2
Gold Plated
G_G_BATT-1
C1E104H-4
BK-GN,1.5,702
S1D120A
BK-GN,6.0,689
G1D120A-1
G_G_BATT-2
C1E104H-3
BK-GN,1.5,702
G_G_BATT-3
C1E104H-53
BK-GN,1.5,702
Engine control module (ECM) (D131)
Sensor-Pressure-Air Conditioning (T283)
F
(PETROL)
GN-BU,0.5,2165
C1E105B-34
G_R_ATS
5VACPH
C1E105B-31
BN,0.5,2165
C11P-20 C11N-20
BN,0.5,1605
C1H433A-3
VCC
H
YE-GN,0.5,2165
C1E105B-35
ATS
ACPH
C1E105B-51
GN-BN,0.5,2165
C11P-19 C11N-19
GN-BN,0.5,1605
C1H433A-2
SIG
A
WH-OG,0.5,1995
C1E105B-10
ACCR
C1E105B-37
GY-BN,0.5,2165
G_R_ACPH
C11P-18 C11N-18
GY-BN,0.5,1605
C1H433A-1
GND
(GTDI)
Sensor-Engine coolant-temperature (ECT) (T121)
S1DB04J
WH,0.5,1765
C1E105B-54
HSCANH1
CTS
C1E105A-12
YE,0.5,922
C1E810F-1
Gold Plated
S1DB05J
WH-BU,0.5,1755
C1E105B-41
HSCANL1
G_R_CTS
C1E105A-33
WH-BU,0.5,922
C1E810F-2
Gold Plated
PGND
C1E105B-1
BK-GN,1.5,263
S1D120C
BK-GN,2.5,160
G1D120B-1
PGND
C1E105B-2
BK-GN,1.5,263
PGND
C1E105B-4
BK-GN,1.5,263